DAQ Processing Engine Board

Compact embedded processing engine with precise GPS-based synchronization for distributed data acquisition systems.

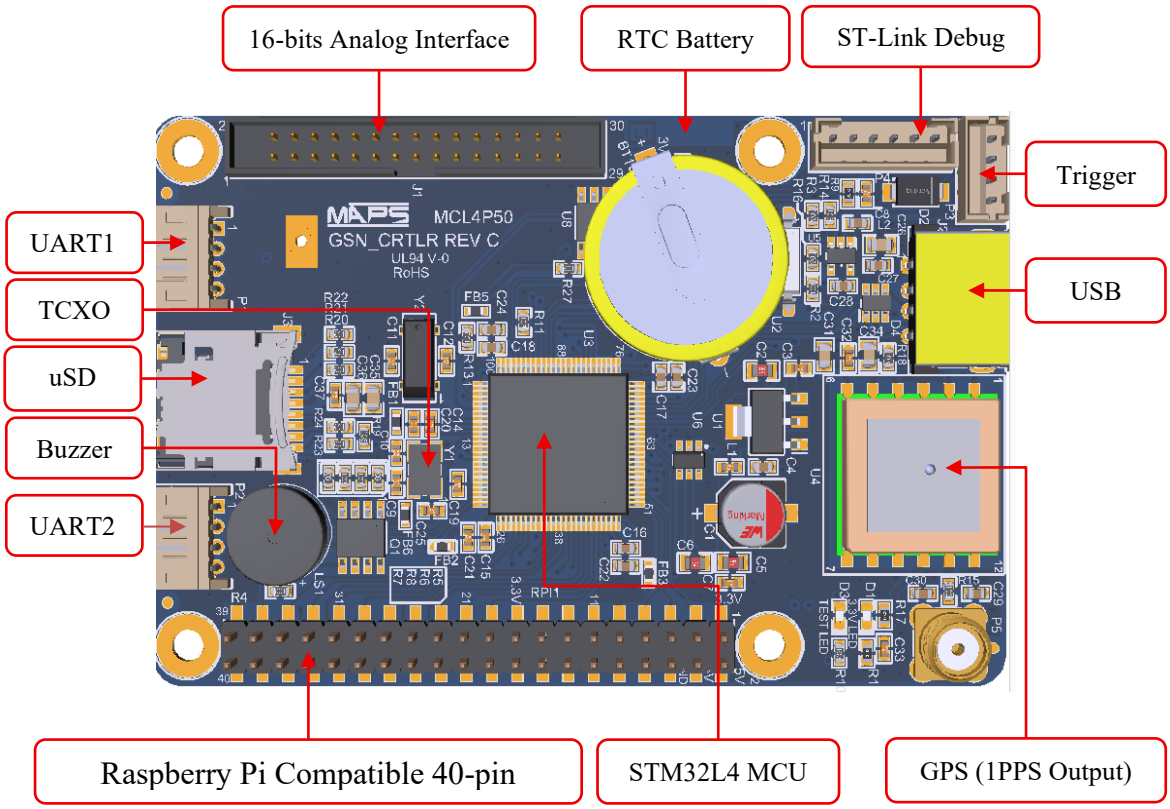

Processing & Core Architecture

- Powered by STM32L4P5VGT6 (Ultra-low-power MCU, 100-pin)
- High-performance processing with optimized power consumption
- External SPI Flash (16MB) for data logging and firmware storage
- On-board EEPROM for configuration storage and system parameters

Timing & Synchronization

- Integrated GPS module with 1PPS output
- Time synchronization across distributed sensor nodes
- PPS-aligned sampling support for synchronized data acquisition across multi-location nodes
- High-stability TCXO clocking for accurate time base and synchronization
- MCU Internal RTC with battery backup for time retention

Interface & Connectivity

- Dual UART (TTL level) for communication and expansion
- USB OTG interface for device/host functionality
- SDIO-based microSD interface (4-bit) for high-speed data logging

System Integration & Control

- Raspberry Pi-compatible 40-pin header for ecosystem integration
- Isolated trigger input for safe external event capture
- On-board buzzer (beep) for audio feedback and alerts

- Designed as a central processing and synchronization unit for distributed data acquisition systems

Power & Mechanical

- Powered from 5V input
- Compact 56 × 85 mm form factor (RPi 4B compatible footprint)
- Suitable for embedded and field-deployable systems

Design & Customization Support

- Complete **design files (schematics, Gerber, and assembly data)** can be shared on request
- Supports **customization and design adaptation** for specific applications
- Suitable for research, field deployment, and OEM integration